4Matic

Industrial Valves and Valve Automation

KNIFE GATE VALVES

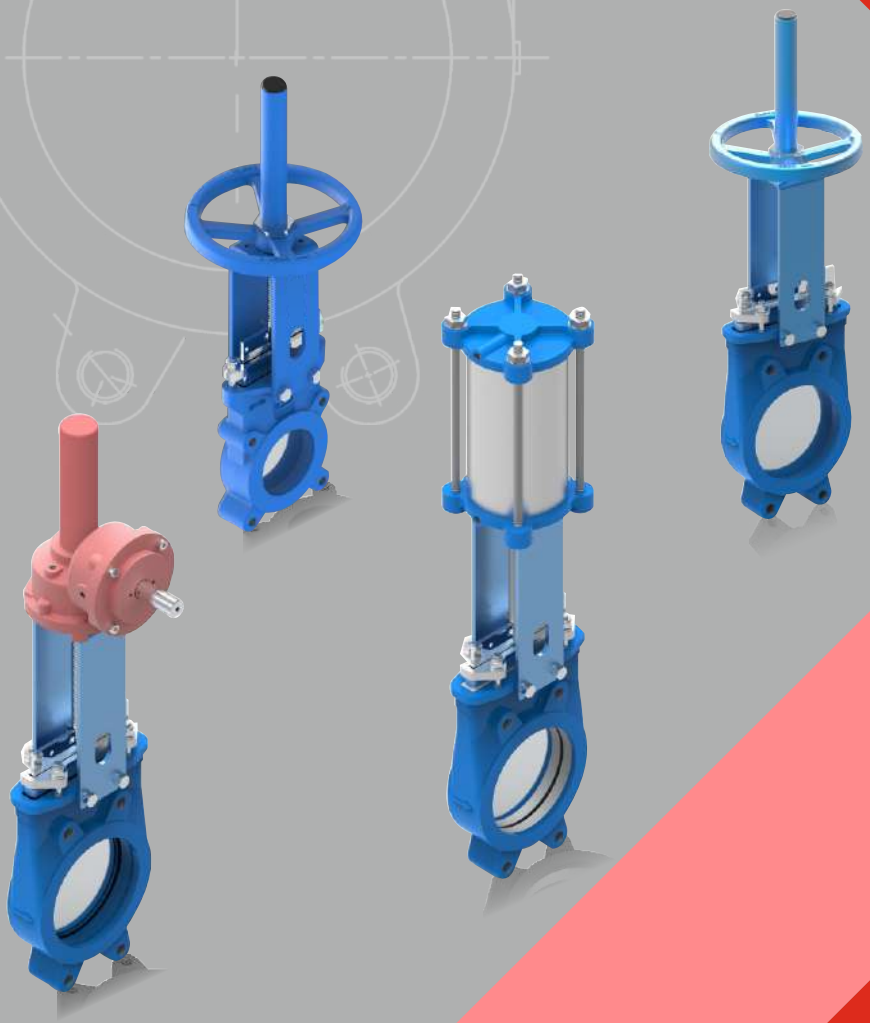

ISO 9001:2015

AWWA

www.4maticvalves.com

4MAX-SERIES-20—WAFER SEMI LUG STYLE KNIFE GATE VALVE

The 4MAX(SER-20) model knife gate valve is a uni-directional valve designed for general industrial service applications. The design of the body and seat assures non-clogging shut off on suspended solid in industries such as:

(1) Pulp and Paper
(2) Power Plants
(3) Wastewater Treatment Plants
(4) Chemical Plants
(5) Food and Beverage
(6) Bulk Handling
(7) Mining

Sizes: DN 50 to DN 1200 (larger diameters on-request)

Working pressure:

DN 50mm to DN 250mm	10 bar
DN 300mm to DN 400mm	6 bar
DN 450mm	5 bar
DN 500mm to DN 600mm	4 bar
DN 700mm to DN 1200mm	2 bar

Standard flange connection:

DIN PN 10 and ANSI B16.5 (class 150)

Other flange connections available on request

DIN PN 6 DIN PN 16 DIN PN 25

BS Table "D" and "E" ANSI 125

→ All valves are tested prior to shipping in accordance with the standard developed by the Quality Control Department.

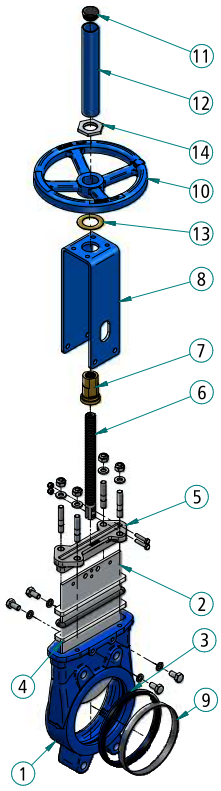

STANDARD PARTS LIST			
No.	Part	Material	Qty.
1	Body	ASTM A 536 GR.65-45-12	1
2	Gate	S.S. 304/316/316L	1
3	Seat	Metal To Metal Or EPDM	1
4	Gland Packing Gasket	PTFE Impregnated Synthetic Fiber/Graphite	2
5	Gland	Aluminum/ASTM a 536 Gr. 65-45-12	1
6	Stem	S.S. 304/316/316L	1
7	Sleeve	Brass	1
8	Bracket	M.S/S.S	1
9	Ring	S.S.	1
10	Hand Wheel	C.I/S.G.I.	1
11	Bush For Pipe	Plastic/Nylon	1
12	Pipe	M.S.	1
13	Washer	Brass	1
14	Sleeve Lock Nut	M.S/S.S	1

Note : We keep our rights reserved to make changes time to time in technical specifications and dimensions without prior notice.

DESIGN FEATURES

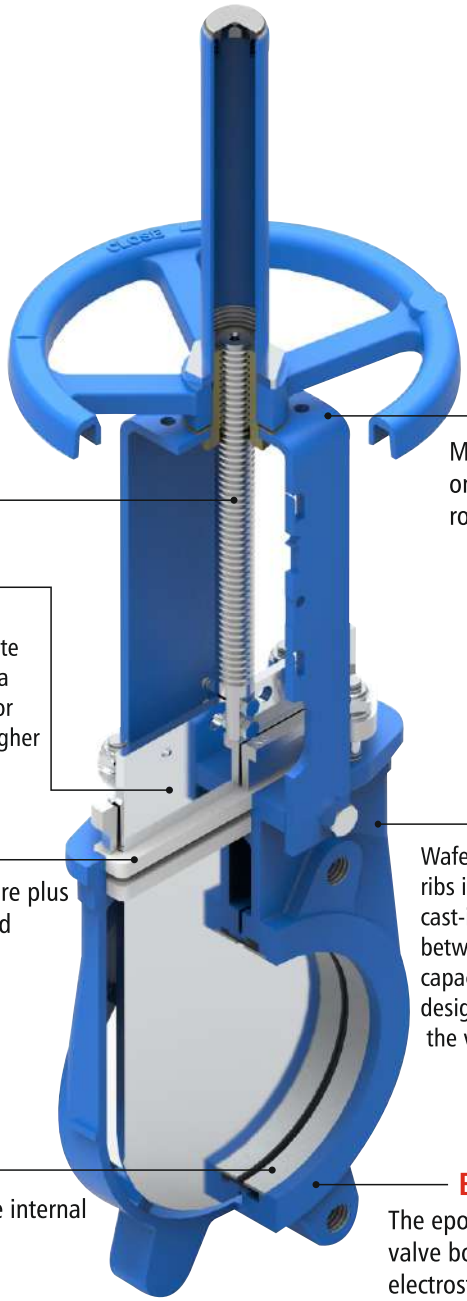

STEM
The standard stainless steel stem offers a long corrosion resistant life. For rising stem handwheel actuators only, a stem protector is provided for additional protection against dust while the valve is in the open position.

YOKE OR ACTUATOR SUPPORT
Made of EPOXY coated steel (stainless steel available on request). Compact design makes it extremely robust even under the most severe conditions.

GATE
Stainless steel gate. Gate is polished on both sides to avoid jamming and seat damage. Bottom of the gate edge is machined to a bevel to cut through solids for a tighter seal in the closed position. The thickness and/or material of the gate can be changed on request for higher pressure requirements.

BODY
Wafer style cast monoblock with raised faces and reinforcing ribs in large diameters for extra body strength. Internal cast-in gate wedges and guides allow for a tighter shut-off between gate and seat. Full port design for greater flow capacity and minimal pressure drop. The internal body design avoids any accumulation of solids that would prevent the valve from closing.

PACKING
Long-life packing with several layers of braided fibre plus an EPDM o-ring, with an easy access packing gland ensuring a tight seal. Long-life braided packing is available in a wide range of materials.

SEAT: (Resilient)
Unique design that mechanically locks the seal in the internal of the valve body with a stainless steel retainer ring. Standard EPDM also available in different materials such as Viton, PTFE, etc.

EPOXY COATING
The epoxy coating on all cast iron and carbon steel valve bodies and components is applied by means of an electrostatic process, making the valves corrosion-resistant with a high quality finished surface. The **"4Matic"** standard colour is RAL-5015 blue.

ACTUATORS
All actuators supplied by **"4Matic"** are interchangeable, and supplied with a standard mounting kit for installation purposes on site.

Note : We keep our rights reserved to make changes time to time in technical specifications and dimensions without prior notice.

TEMPERATURE CHART

SEAT / SEALS

Material	Max.T (ºF)	(ºC)	Applications
Metal/Metal	>482	>250	High temp./Low tightness
EPDM (E)	248	120	Acids and non mineral oils
Nitrile (N)	248	120	Resistance to petroleum products
Viton (V)	392	200	Chemical service/High temp.
Silicone (S)	482	250	Food service/High temp.
PTFE (T)	482	250	Corrosion resistance

→ More details and other materials on request

PACKING

Material	Max.T (ºF)	(ºC)	pH
Dry cotton (AS)	122	50	6 - 8
PTFE impregn. synth. fibre (ST)	464	240	2 - 13
Braided PTFE (TH)	500	260	0 - 14
Graphited (GR)	1112	600	0 - 14
Ceramic fibre (FC)	2192	1200	--

NOTE: all types include an elastomere O-ring (same material as seal), excluding TH, GR and FC.

-:SEAT TYPES:-

RESILIENT TYPE "A"
- Standard resilient seat.
- Temperature limitations according to the selected seat material. Review the above chart or contact our Technical Department for more information.
- Seat with replaceable retainer ring.

METAL/METAL
For applications with:
- High temperature
- High density media application
- In those cases when full tightness is not required

TYPE "B" SEAT (resilient)
- Temperature limitations according to the selected seat material. Review the above chart or contact our Technical Department for more information.
- Replaceable and reinforced seat ring available in different materials such as: stainless steel, CA1 5, Ni Hard,…

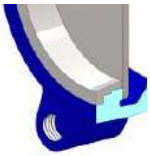

TYPE "B" SEAT (metal/metal)
For applications with:
- High temperature
- High density media application
- In those cases when full tightness is not required
- Replaceable design without disassembling the valve

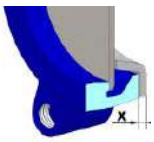

DEFLECTION CONE "C"
- Deflects the media away from any valve internal exposed parts (gate, seat, .)
- Material: AISI 316, CA15, Ni-Hard, etc.
- Face-to-face dimension increases:
  DN 50 to DN 250 X = 9mm
  DN 300 to DN 600 X = 12mm
  Larger diameters on request

Note : We keep our rights reserved to make changes time to time in technical specifications and dimensions without prior notice.

HANDWHEEL (Rising Stem)

- **Standard manual actuator**
- **Consists of:**
  - Handwheel: Epoxy coated Cast Iron
  - Stem
  - Stem nut
  - Stem protector
- **Available from DN 50 to DN 1000**
- **Options:**
  - Locking Device
  - Extensions

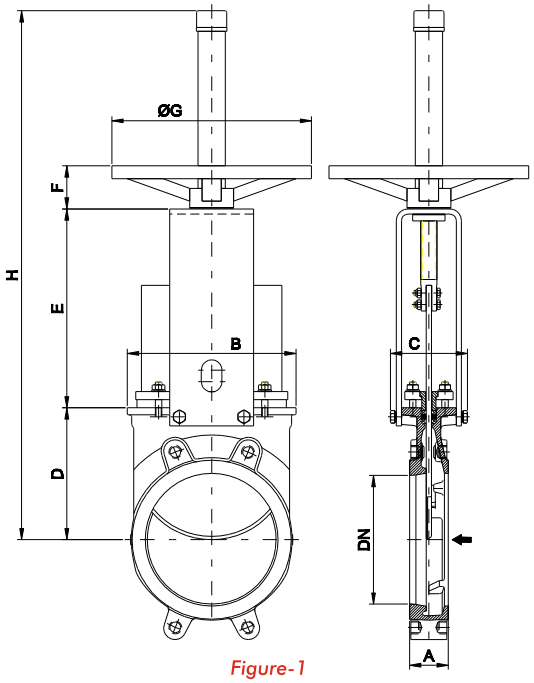

Figure-1

Figure-1

DN (mm/inch)	A	B	C	D	E	F	ØG	H	Weight (kg.)
50 (2")	40	119	100	105	129	47	225	420	7
65 (2.1/2")	40	134	100	115	146	47	225	450	8
80 (3")	50	149	100	124	162	47	225	475	9
100 (4")	50	169	100	140	187	47	225	520	11
125 (5")	50	180	100	150	211	47	225	600	15
150 (6")	60	210	100	175	237	47	225	652	18
200 (8")	60	262	119	205	309	67	310	822	30
250 (10")	70	318	122	250	364	67	310	1022	44
300 (12")	70	372	122	300	414	67	310	1122	58
350 (14")	96	431	197	338	486	66	410	1323	96
400 (16')	100	486	197	392	536	66	410	1427	124
450 (18")	106	540	201	432	588	66	550	1594	168
500 (20")	110	602	201	485	648	66	550	1707	192
600 (24")	110	708	201	590	748	66	550	2022	245
700 (28")	110	834	380	686	890	74	800	2778	405
750 (30")	110	884	380	760	945	74	800	2900	455
800 (32")	110	1015	320	791	989	74	800	2980	512
900 (36")	110	1040	320	895	1118	74	800	3215	680
1000 (40")	110	1146	320	975	1220	74	800	3400	865

Note : We keep our rights reserved to make changes time to time in technical specifications and dimensions without prior notice.

HANDWHEEL (Non-Rising Stem)

- **Recommended for installation where space is limited.**

- **Consists of:**
  - Handwheel
    - DN 50 -300: S.G.I
    - DN ≥350: GJS400 (GGG40)
  - Stem
  - Yoke bushing
  - Stem nut fixed to the gate

- **Available from DN 50 to DN 1000**

- **Options:**
  - Locking Device
  - Extension
  - Square Nut Drive

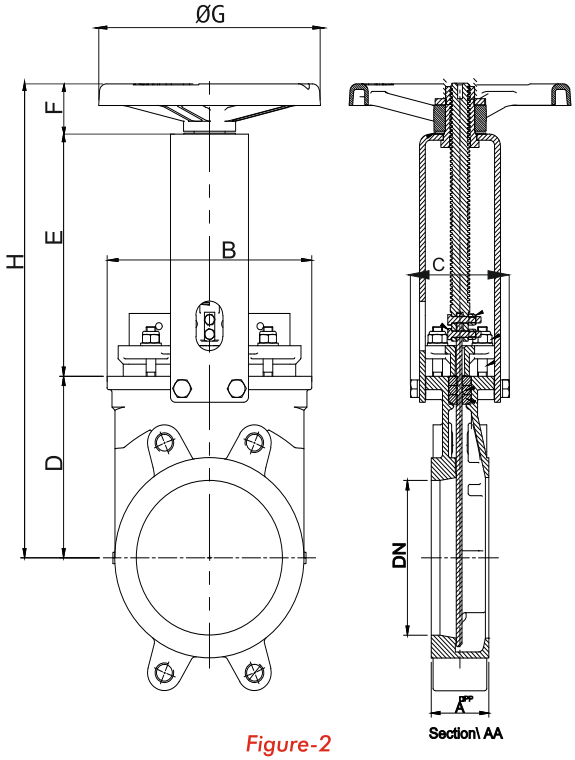

Figure-2

Figure-2

DN (mm/inch)	A	B	C	D	E	F	ØG	H
50 (2")	40	119	125	105	144	63	225	312
65 (2.1/2")	40	134	125	115	161	63	225	339
80 (3")	50	149	125	124	177	63	225	364
100 (4")	50	169	125	140	202	63	225	405
125 (5")	50	180	125	150	226	63	225	439
150 (6")	60	210	125	175	252	63	225	490
200 (8")	60	262	142	205	317	73	310	595
250 (10")	70	318	142	250	372	73	310	695
300 (12")	70	372	142	300	422	73	310	795
350 (14")	96	431	197	338	509	98	410	945
400 (16')	100	486	197	392	559	98	410	1049
450 (18")	106	540	201	432	611	98	550	1141
500 (20")	110	602	201	485	671	98	550	1254
600 (24")	110	708	201	590	771	98	550	1459
700 (28")	110	834	380	686	900	151	800	1737
750 (30")	110	884	380	760	945	151	800	1856
800 (32")	110	1015	320	791	997	151	800	1937
900 (36")	110	1040	320	895	1128	151	800	2174
1000 (40")	110	1150	320	975	1255	151	800	2381

ISO 9001:2015
AWWA
Note : We keep our rights reserved to make changes time to time in technical specifications and dimensions without prior notice.

CHAINWHEEL

- **Recommended for elevated installations.**
- **Consists of:**
  - Chainwheel: Epoxy Coated Cast Iron
  - Stem
  - Stem Nut
  - Stem Protector
- **Available from DN 50 to DN 600**
- **Options:**
  - Locking Device
  - Extension
  - Rising Stem and Non-Rising Stem

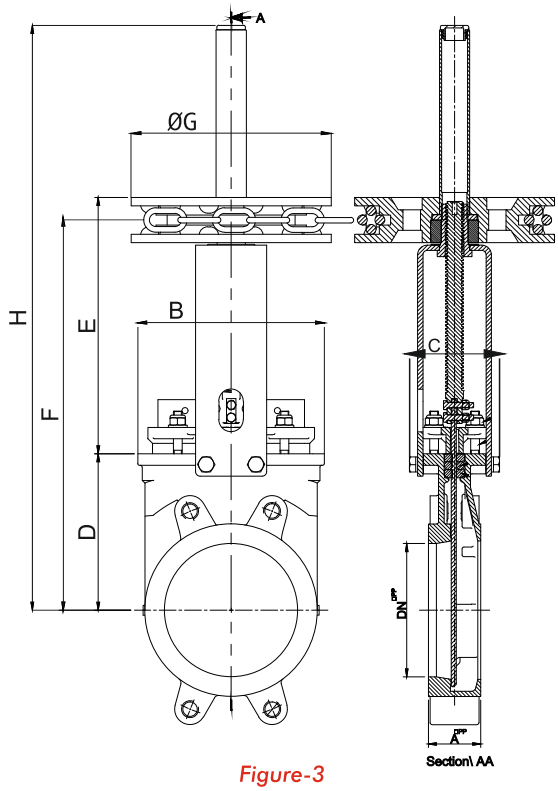

Figure-3

Figure-3

DN (mm/inch)	A	B	C	D	E	F	ØG	H
50 (2")	40	119	100	105	129	253	225	420
65 (2.1/2")	40	134	100	115	146	280	225	450
80 (3")	50	149	100	124	162	305	225	475
100 (4")	50	169	100	140	187	347	225	520
125 (5")	50	180	100	150	211	380	225	600
150 (6")	60	210	100	175	237	431	225	652
200 (8")	60	262	119	205	309	538	300	822
250 (10")	70	318	122	250	364	638	300	1022
300 (12")	70	372	122	300	414	738	300	1122
350 (14")	96	431	197	338	486	856	454	1323
400 (16')	100	486	197	392	536	960	454	1427
450 (18")	106	540	201	432	588	1052	454	1594
500 (20")	110	602	201	485	648	1165	454	1707
600 (24")	110	708	201	590	748	1370	454	2022

Note : We keep our rights reserved to make changes time to time in technical specifications and dimensions without prior notice.

GEAR

- Recommended for valves larger than DN 350 and working pressures greater than 3.5 bar

- **Consists of:**
  - Stem
  - Stem Protector
  - Bevel Gear Actuator with Handwheel

- **Available from DN 200 to DN1200**

- **Options:**
  - Locking Device
  - Extension
  - Chainwheel
  - Rising Stem and Non-Rising Stem

- Standard reduction ratio of 4:1

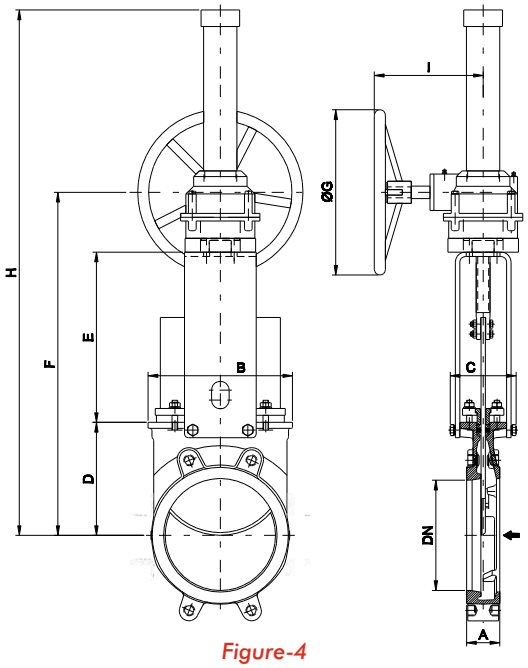

Figure-4

Figure-4

DN (mm/inch)	A	B	C	D	E	F	ØG	H	I
200 (8")	60	262	119	205	309	584	300	994	200
250 (10")	70	318	122	250	364	684	300	1094	200
300 (12")	70	372	122	300	414	784	300	1194	200
350 (14")	96	431	197	338	472	857	450	1657	262
400 (16')	100	486	197	392	522	961	450	1761	262
450 (18")	106	540	201	432	574	1053	450	1853	262
500 (20")	110	602	201	485	634	1166	450	1966	262
600 (24")	110	708	201	590	734	1371	450	2171	262
700 (28")	110	834	380	686	890	1623	450	2423	262
750 (30")	110	884	380	760	945	1755	450	2555	262
800 (32")	110	1015	320	791	993	1886	650	2926	260
900 (36")	110	1040	320	895	1123	2120	650	3160	288
1000 (40")	110	1146	320	975	1220	2302	650	3342	288
1200 (48")	150	1390	450	1037	1522	2695	850	3935	365

Note : We keep our rights reserved to make changes time to time in technical specifications and dimensions without prior notice.

PNEUMATIC CYLINDER / ELECTRIC ACTUATOR

- **The standard pneumatic actuator (double acting on-off cylinder) consists of:**
  - Ø ≤ 300: Aluminum barrels
  - Ø ≥ 350: Composite barrels
  - Aluminum end covers
  - Stainless steel (AISI 304) piston rod
  - Nitrile coated steel piston
- Available from DN 50 to DN 1000
- Supply Pressure: min. 3.5 bar max. 10 bar. Actuator designed with 6 bar air supply.
- For valves installed in a horizontal position, we recommend U-type support plates and/or actuator support.

- **Options:**
  - Hard anodized barrel and covers
  - Stainless steel barrel and covers
  - Over/Undersized cylinder
  - Manual override
  - Fail safe system
  - Limit switches
- **Instrumentation (on request):**
  - Positioners
  - Solenoid valves
  - Flow regulators
  - Air preparation units

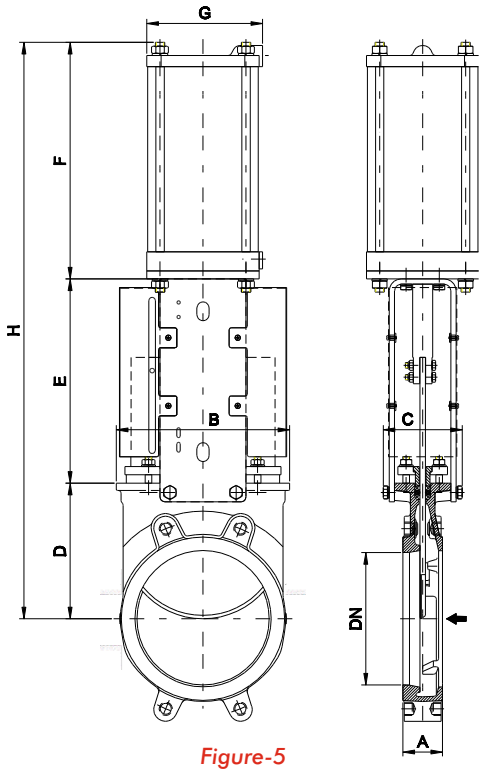

Figure-5

- **ELECTRIC ACTUATOR**

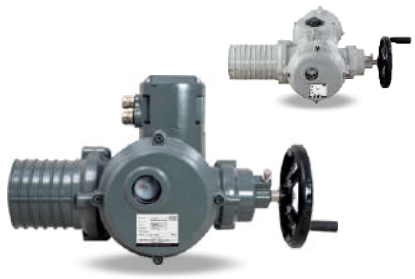

Also Available With Electric Actuator

Figure-5

DN (mm/inch)	A	B	C	D	E	F	ØG	H	Weight (kg.)	Standard Cyl.	Connect
50 (2")	40	119	100	105	129	178	115	412	9	4MC100/62	1/4" G
65 (2.1/2")	40	134	100	115	146	193	115	454	10	4MC100/77	1/4" G
80 (3")	50	149	100	124	162	211	115	497	11	4MC100/95	1/4" G
100 (4")	50	169	100	140	187	231	115	558	14	4MC100/115	1/4" G
125 (5")	50	180	100	150	211	271	140	632	20	4MC125/143	1/4" G
150 (6")	60	210	100	175	237	296	140	708	25	4MC125/168	1/4" G
200 (8")	60	262	119	205	309	358	175	872	44	4MC160/220	1/4" G
250 (10")	70	318	122	250	364	428	220	1042	67	4MC200/270	3/8" G
300 (12")	70	372	122	300	414	478	220	1192	82	4MC200/320	3/8" G
350 (14")	96	431	197	338	500	549	277	1387	135	4MC250/375	3/8" G
400 (16')	100	486	197	392	550	599	277	1541	165	4MC250/425	3/8" G
450 (18")	106	540	270	432	598	680	382	1710	220	4MC300/475	1/2" G
500 (20")	110	602	270	485	658	730	382	1873	280	4MC300/525	1/2" G
600 (24")	110	708	270	590	758	830	382	2178	380	4MC300/625	1/2" G
700 (28")	110	834	380	686	875	985	444	2546	520	4MC350/730	3/4" G
750 (30")	110	884	380	760	930	1035	444	2725	585	4MC350/780	3/4" G
800 (32")	110	1015	320	791	974	1085	444	2850	650	4MC350/830	3/4" G
900 (36")	110	1040	320	895	1105	1202	515	3202	850	4MC400/930	3/4" G
1000 (40")	110	1146	320	975	1217	1296	515	3488	1060	4MC400/1030	3/4" G

Note : We keep our rights reserved to make changes time to time in technical specifications and dimensions without prior notice.

FLANGE AND BOLTING DETAILS

ANSI B16.5 , Class 150 (*)

Size (DN)	nº	K	M	T	
2"	4	4.3/4"	5/8" - 11 UNC	3/8"	4 - 0 - 0
2.1/2"	4	5.1/2"	5/8" - 11 UNC	3/8"	4 - 0 - 0
3"	4	6"	5/8" - 11 UNC	3/8"	4 - 0 - 0
4"	8	7.1/2"	5/8" - 11 UNC	3/8"	4 - 0 - 4
5"	8	8.1/2"	3/4" - 10 UNC	3/8"	4 - 0 - 4
6"	8	9.1/2"	3/4" - 10 UNC	1/2"	4 - 0 - 4
8"	8	11.3/4"	3/4" - 10 UNC	1/2"	4 - 0 - 4
10"	12	14.1/2"	7/8" - 9 UNC	3/4"	6 - 0 - 6
12"	12	17"	7/8" - 9 UNC	3/4"	6 - 0 - 6
14"	12	18.3/4"	1" - 8 UNC	7/8"	4 - 4 - 4
16"	16	21.1/4"	1" - 8 UNC	1"	6 - 4 - 6
18"	16	22.3/4"	1".1/8" - 7 UNC	1"	6 - 4 - 6
20"	20	25"	1".1/8" - 7 UNC	1"	8 - 6 - 6
24"	20	29.1/2"	1".1/4" - 7 UNC	1"	8 - 6 - 6
28"	28	34"	1".1/4" - 7 UNC	3/4"	12 - 6 - 10
30"	28	36"	1".1/4" - 7 UNC	3/4"	12 - 8 - 8
32"	28	38.1/2"	1".1/2" - 6 UNC	3/4"	12 - 8 - 8
36"	32	42.3/4"	1".1/2" - 6 UNC	3/4"	14 - 12 - 10
40"	36	47.1/4"	1".1/2" - 6 UNC	3/4"	14 - 12 - 10
42"	36	49.1/2"	1".1/2" - 6 UNC	3/4"	14 - 12 - 10
48"	44	56"	1".1/2" - 6 UNC	13/16"	26 - 10 - 8

EN 1092-2 PN10

Size (DN)	nº	K	M	T	
50	4	125	M-16	11	4 - 0 - 0
65	4	145	M-16	11	4 - 0 - 0
80	8	160	M-16	11	4 - 0 - 4
100	8	180	M-16	11	4 - 0 - 4
125	8	210	M-16	11	4 - 0 - 4
150	8	240	M-20	14	4 - 0 - 4
200	8	295	M-20	14	4 - 0 - 4
250	12	350	M-20	18	6 - 0 - 6
300	12	400	M-20	18	6 - 0 - 6
350	16	460	M-20	22	6 - 4 - 6
400	16	515	M-24	24	6 - 4 - 6
450	20	565	M-24	24	8 - 6 - 6
500	20	620	M-24	24	8 - 6 - 6
600	20	425	M-27	24	8 - 6 - 6
700	24	840	M-27	20	10 - 6 - 8
800	24	950	M-30	20	10 - 6 - 8
900	28	1050	M-30	20	12 - 8 - 8
1000	28	1160	M-33	20	12 - 8 - 8
1200	32	1380	M-36	30	22 - 6 - 4

150# (ANSI B16.47)

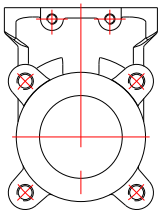
DN 50-80

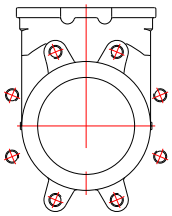
DN 100-200

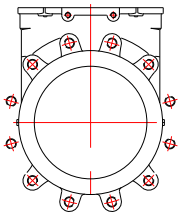
DN 350

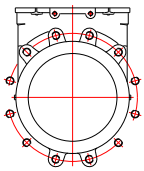
DN 250-300

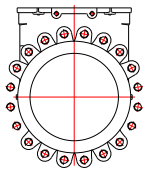
DN 500-600

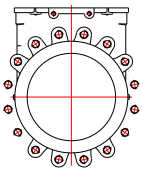
DN 400-450

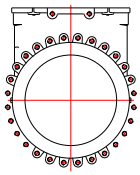
DN 700

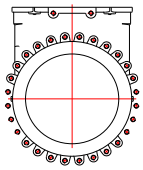
DN 750-800

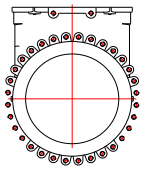
DN 900

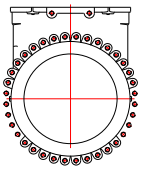
DN 1000-1050

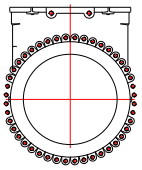
DN 1250

Note : We keep our rights reserved to make changes time to time in technical specifications and dimensions without prior notice.

NOTES

Note : We keep our rights reserved to make changes time to time in technical specifications and dimensions without prior notice.

KNIFE GATE VALVES

EXPORT TO 30+ COUNTREIS

4Matic

Industrial Valves and Valve Automation

www.4maticvalves.com
info@4maticvalves.com

ISO 9001:2015

AWWA